XS4 2.0 CONTROLLER

Cutting edge design & amazing technology

SALTO inspiredaccess

The SALTO XS4 2.0 Controller incorporates the cutting edge design standard of the XS4 2.0 product range in this technological powerhouse.

4-6 Castle Street, Northwich,
Cheshire. CW8 1BA.

01606 331444
admin@lock-tec.co.uk

SALTO XS4 2.0 CONTROLLER ONLINE

CU42E0

SALTO's latest Control Unit makes it even easier to bring superior access control to your facility thanks to the ability to
control and manage multiple doors through one Ethernet connection and one IP address.

This means that extending SALTO access control benefits to all those doors where a stand-alone electronic escutcheon cannot be fitted (electric strikes, magnets, barriers, elevators, etc.) is even easier and more cost-effective.

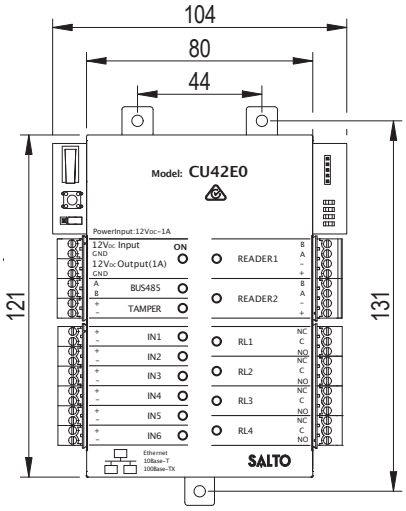

MAIN FEATURES

- Online IP based door controller.
- Two wall reader connection that can be configured as 2 different doors or one door reader in and reader out locking.
- Antipass-back mode available by connecting 2 wall readers and set up as one door.
- 4 relay outputs.
- 6 inputs to connect to:
  - Door detector, request to exit switch (RTE), office switch.
- 2 different tampers:
  - one tamper input
  - and one tamper switch.
- Door monitoring and tamper monitoring via contacts input (intrusion alarm and door left opened alarm.

CERTIFICATIONS:
- CE comform
- UL 294
- FCC certified

- To be used with all SALTO XS4 2.0 Readers (WRDBxxx and WRMBxxx series).
- Virtual network capable through SALTO Virtual Network technology.
- All communications between the carrier and the wall reader are encrypted and secure[2].
- The maximum cable length between the door controller and the wall reader is up to 400 meters[3].
- Connection to the wall reader using 4 wire connection, twisted pair.
- Power consumption: 12VDC 400mA (without XS4 2.0 readers), supplied by an adaptor.

MECHANICAL ASPECTS:
- Dimensions: 104mm x 131mm x 43,3mm (W x H x D).
- Weight: 0.5kg.

[1] Not available yet.
[2] Depending on the card and the RFID technology
[3] Depending on the cable.

INSTALLATION

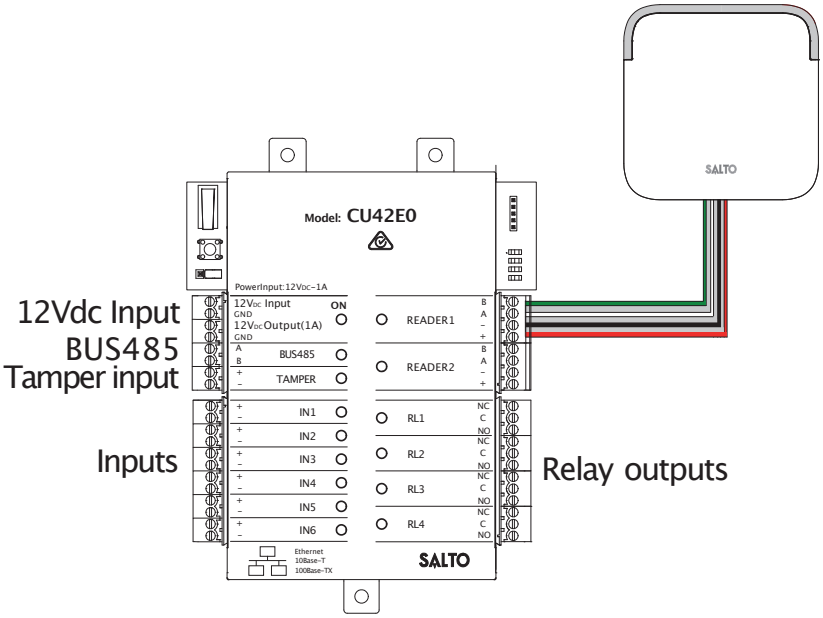

LOCK-TEC (UK) Ltd
www.lock-tec.co.uk

4-6 Castle Street, Northwich,
Cheshire. CW8 1BA.

01606 331444
admin@lock-tec.co.uk

XS4 2.0 CONTROLLER ONLINE WITH PSU & HOUSING

SALTO XS4 2.0
CONTROLLER ONLINE

SALTO's latest Control Unit makes it even easier to bring superior access control to your facility thanks to the ability to control and manage multiple doors through one Ethernet connection and one IP address.

This means that extending SALTO access control benefits to all those doors where a stand-alone electronic escutcheon cannot be fitted (electric strikes, magnets, barriers, elevators, etc.) is even easier and more cost-effective.

FRONT

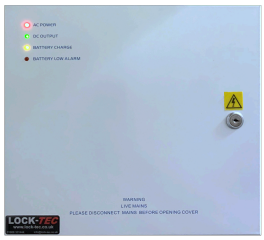

INSIDE

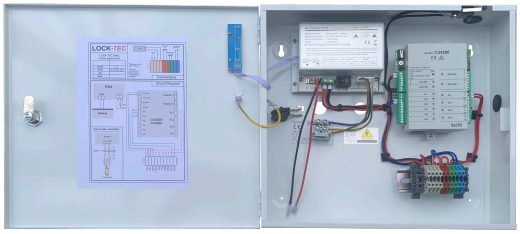

Supplied with a steel enclosure and powder coated white finish complete with a 3amp or 5amp switch mode power supply unit and bespoke wiring to suit many applications, the SALTO XS4 2.0 online controller supplied by LOCK-TEC is perfect for the majority of access control applications.

MAIN FEATURES

- Online IP based door controller.
- Two wall reader connection that can be configured as 2 different doors or one door reader in and reader out locking.
- Antipass-back mode available by connecting 2 wall readers and set up as one door.
- 4 relay outputs.
- 6 inputs to connect to:
  - Door detector, request to exit switch (RTE), office switch.
- 2 different tampers:
  - one tamper input
  - and one tamper switch.
- Door monitoring and tamper monitoring via contacts input (intrusion alarm and door left opened alarm.

POWER SUPPLY:

AC Supply	100-240 vac 50/60hz
Output voltage - on mains power	12.0-14.0 vdc adjustable
Output voltage - on battery standby	10.0-12.5 vdc
Max. Output current	3.0A
Max. Charge current	0.8A
Battery compartment	17ah/12v
Operation temperature	-20 ~ +45 degree celsius
Humidity	up to 90% non-condensing

- To be used with all SALTO XS4 2.0 Readers (WRDBxxx and WRMBxxx series).
- Virtual network capable through SALTO Virtual Network technology.
- All communications between the carrier and the wall reader are encrypted and secure[2].
- The maximum cable length between the door controller and the wall reader is up to 400 meters[3].
- Connection to the wall reader using 4 wire connection, twisted pair.
- Power consumption: 12VDC 400mA (without XS4 2.0 readers), supplied by an adaptor.

MECHANICAL ASPECTS:

- Dimensions: 330mm x 300mm x 80mm (W x H x D).
- Weight: 1kg.

CERTIFICATIONS:

- CE comform
- UL 294
- FCC certified

[1] Not available yet.
[2] Depending on the card and the RFID technology
[3] Depending on the cable.

INSTALLATION

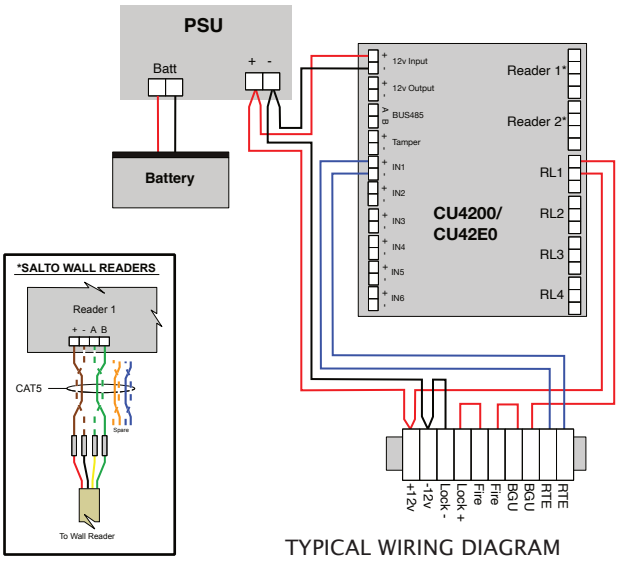

TYPICAL WIRING DIAGRAM

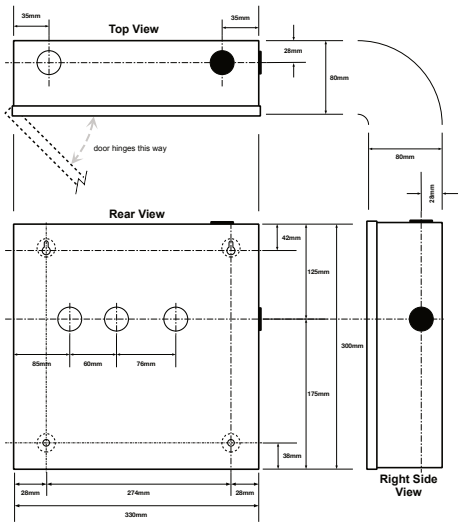

LOCK-TEC (UK) Ltd

www.lock-tec.co.uk

4-6 Castle Street, Northwich,
Cheshire. CW8 1BA.

01606 331444
admin@lock-tec.co.uk

SALTO XS4 2.0 CONTROLLER ONLINE WITH HOUSING

CU42E0x

CU42E0T

CU42E0G

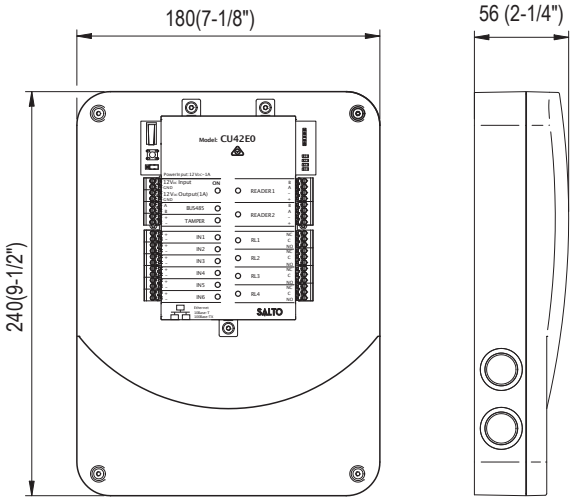

SALTO's latest Control Unit makes it even easier to bring superior access control to your facility thanks to the ability to control and manage multiple doors through one Ethernet connection and one IP address.

This means that extending SALTO access control benefits to all those doors where a stand-alone electronic escutcheon cannot be fitted (electric strikes, magnets, barriers, elevators, etc.) is even easier and more cost-effective.

With the new XS4 2.0 Controller Online with Housing it is easier to install and it enhanced the aesthetic and sturdiness.

MAIN FEATURES

- Online IP based door controller.
- Two wall reader connection that can be configured as 2 different doors or one door reader in and reader out locking.
- Antipass-back mode available by connecting 2 wall readers and set up as one door.
- 4 relay outputs.
- 6 inputs to connect to:
  - Door detector, request to exit switch (RTE), office switch.
- 2 different tampers:
  - one tamper input
  - and one tamper switch.
- Door monitoring and tamper monitoring via contacts input (intrusion alarm and door left opened alarm.

MECHANICAL ASPECTS:

- Dimensions: 180mm x 240mm x 56mm (W x H x D).
- Weight: 0.7kg.

- To be used with all SALTO XS4 2.0 Readers (WRDBxxx and WRMBxxx series).
- Virtual network capable through SALTO Virtual Network technology.
- All communications between the carrier and the wall reader are encrypted and secure[2].
- The maximum cable length between the door controller and the wall reader is up to 400 meters[3].
- Connection to the wall reader using 4 wire connection, twisted pair.
- Power consumption: 12VDC 400mA (without XS4 2.0 readers), supplied by an adaptor.
- 2 different Housing finishes translucent or grey opac.
- 8 pre-punched holes to fit the wiring.
- Screws and caps included.

CERTIFICATIONS:

- CE comform
- UL 294
- FCC certified

[1] Not available yet.
[2] Depending on the card and the RFID technology
[3] Depending on the cable.

INSTALLATION

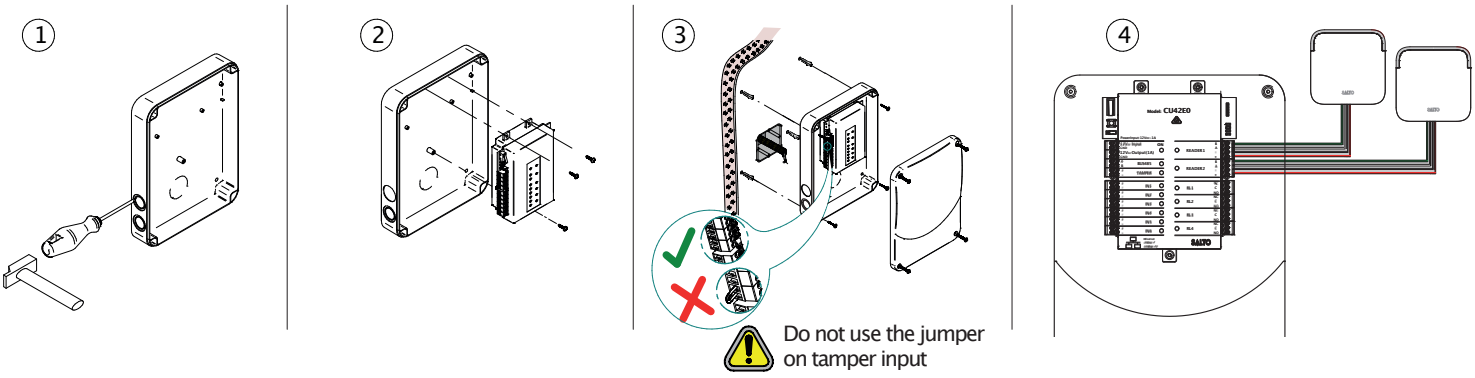

LOCK-TEC (UK) Ltd
www.lock-tec.co.uk
4-6 Castle Street, Northwich,
Cheshire. CW8 1BA.
01606 331444
admin@lock-tec.co.uk

XS4 2.0 CONTROLLER – ONLINE DOOR CONTROLLER SETUP

ONLINE CONTROLLER (CU42E0):

- Connection with the server via Ethernet 100BASE–TX or 10Base–T.
- Requires one IP address.
- Initialization via Ethernet online connection.
- Set up through SALTO ProAccess SPACE software.
- Set up:
  - As One door (reader in & reader out).
  - Two doors (reader one – door one, reader two – door two).

  Supports up to 4 auxiliar controllers (CU42000).
- One IP address needed to control up to 10 doors.

ONLINE AUXILIAR CONTROLLER (CU4200):

- Connection with the online controller (CU42E0) via BUS485.
- Do not requires IP address.
- Initialization via Ethernet online connection.
- Set up through SALTO ProAccess SPACE software.
- Set up:
  - As One door (reader in & reader out).
  - Two doors (reader one – door one, reader two – door two).

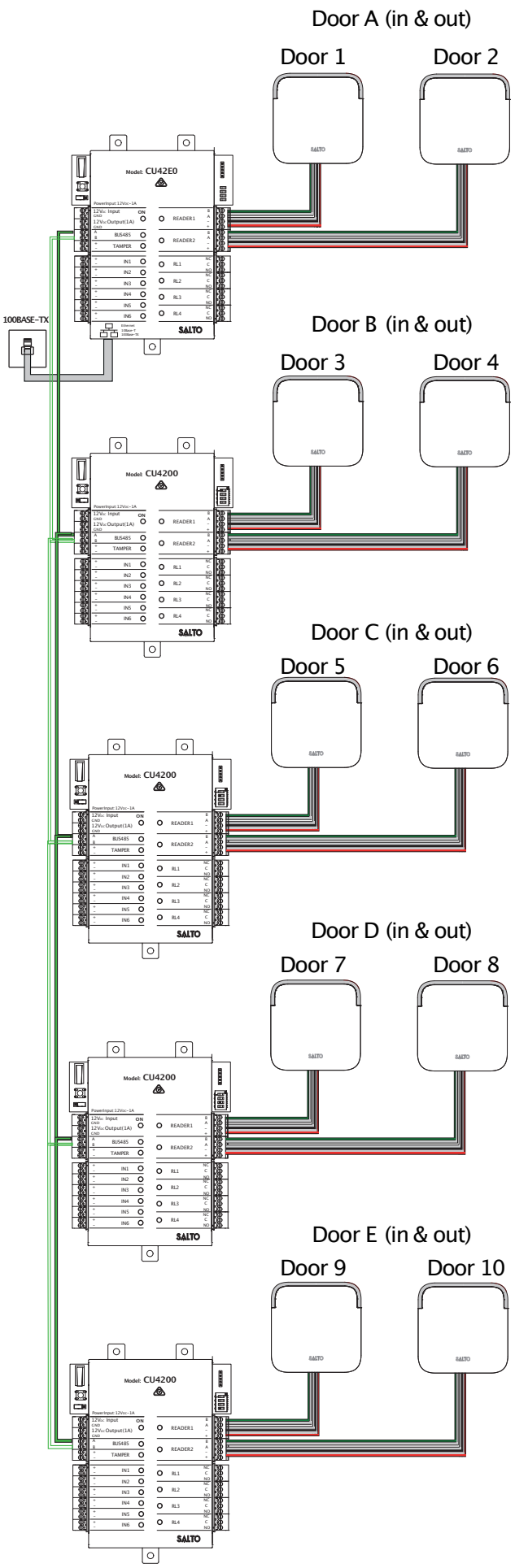

SALTO XS4 2.0 AUXILIAR OR OFFLINE CONTROLLER

CU4200

SALTO's latest Control Unit makes it even easier to bring superior access control to your facility thanks to the ability to
control and manage multiple doors through one Ethernet connection and one IP address.

The New SALTO XS4 2.0 Controller CU4200 is an auxiliar controller that do not requires an IP address and can be set
up as an auxiliar controller connected to an XS4 online controller (CU42E0) or can work as offline controller reducing the costs of installation keeping all the advantages of the SALTO Data-on-card technology.

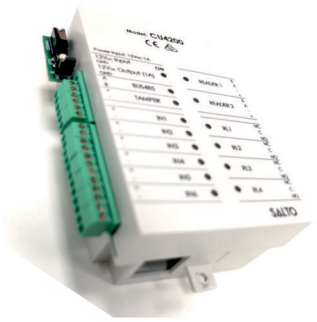

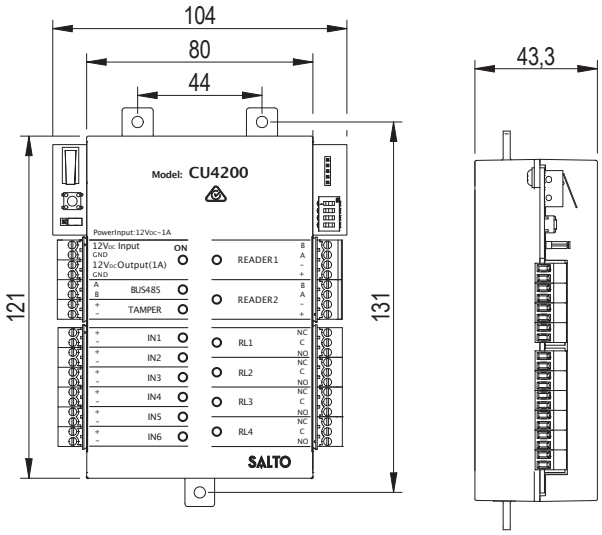

MAIN FEATURES

- Two wall reader connection that can be configured as 2 different doors[1], or one door reader-in and reader-out locking if set up as offline and programmed via PPD.
- Antipass-back mode available by connecting 2 wall readers and set up as one door.
- 4 relay outputs.
- 6 inputs to connect to:
  - Door detector, request to exit switch (RTE), office switch.
- 2 different tampers:
  - One tamper input,
  - and one tamper switch.
- Door monitoring and tamper monitoring via contacts input (intrusion alarm and door left opened alarm)[2].

CERTIFICATIONS:
- CE comform
- UL 294
- FCC certified

- To be used with all SALTO XS4 2.0 Readers (WRDBxxx and WRMBxxx series).
- Virtual network capable through SALTO Virtual Network technology.
- All communications between the carrier and the wall reader are encrypted and secure[4].
- The maximum cable length between the door controller and the wall reader is up to 400 meters[5].
- Connection to the wall reader using 4 wire connection, twisted pair.
- Power consumption: 12VDC 400mA (without XS4 2.0 readers), supplied by an adaptor.

MECHANICAL ASPECTS:
- Dimensions: 104mm x 131mm x 43,3mm (W x H x D).
- Weight: 0.5kg.

[1] If the controller is set up as an auxiliar controller and conneted to a CU42E0 by BUS485
[2] If connected to an online CU42E0 or via audit trail if offline.
[3] Not available yet.
[5] Depending on the card and the RFID technology
[5] Depending on the cable.

INSTALLATION

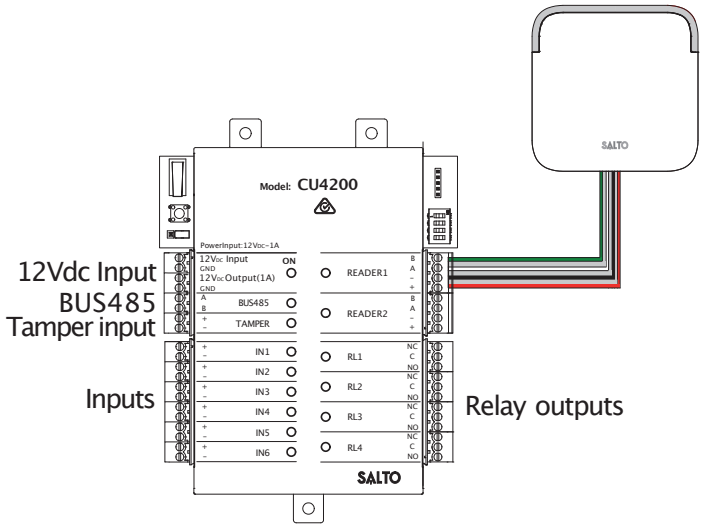

LOCK-TEC (UK) Ltd
www.lock-tec.co.uk
4-6 Castle Street, Northwich,
Cheshire. CW8 1BA.
01606 331444
admin@lock-tec.co.uk

SALTO XS4 2.0
AUXILIAR OR OFFLINE CONTROLLER WITH HOUSING

SALTO's latest Control Unit makes it even easier to bring superior access control to your facility thanks to the ability to control and manage multiple doors through one Ethernet connection and one IP address. The New SALTO XS4 2.0 Controller CU4200 is an auxiliar controller that do not requires an IP address and can be set up as an auxiliar controller connected to an XS4 online controller (CU42E0) or can work as offline controller reducing the costs of installation keeping all the advantages of the SALTO Data-on-card technology.

With the new XS4 2.0 Auxiliar Controller with Housing it is easier to install and it enhanced the aesthetic and sturdiness.

CU4200x

CU4200T

CU4200G

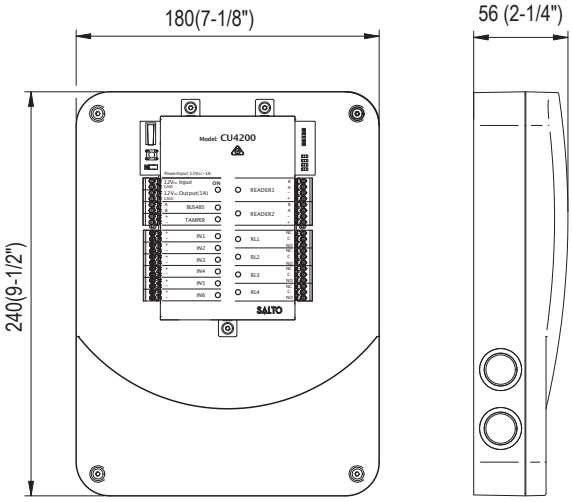

MAIN FEATURES

- Two wall reader connection that can be configured as 2 different doors[1], or one door reader-in and reader-out locking if set up as offline and programmed via PPD.
- Antipass-back mode available by connecting 2 wall readers and set up as one door.
- 4 relay outputs.
- 6 inputs to connect to:
  - Door detector, request to exit switch (RTE), office switch.
- 2 different tampers:
  - One tamper input,
  - and one tamper switch.
- Door monitoring and tamper monitoring via contacts input (intrusion alarm and door left opened alarm)[2].
- o be used with all SALTO XS4 2.0 Readers (WRDBxxx and WRMBxxx series). Virtual network capable through SALTO Virtual Network technology.
- All communications between the carrier and the wall reader are encrypted and secure[4].
- The maximum cable length between the door controller and the wall reader is up to 400 meters[5].
- Connection to the wall reader using 4 wire connection, twisted pair.
- Power consumption: 12VDC 400mA (without XS4 2.0 readers), supplied by an adaptor.
- 2 different Housing finishes translucent or grey opac.
- 8 pre-punched holes to fit the wiring.
- Screws and caps included.

MECHANICAL ASPECTS:
- Dimensions: 180mm x 240mm x 56mm (W x H x D).
- Weight: 0.7kg.

CERTIFICATIONS:
- CE comform
- UL 294
- FCC certified

INSTALLATION

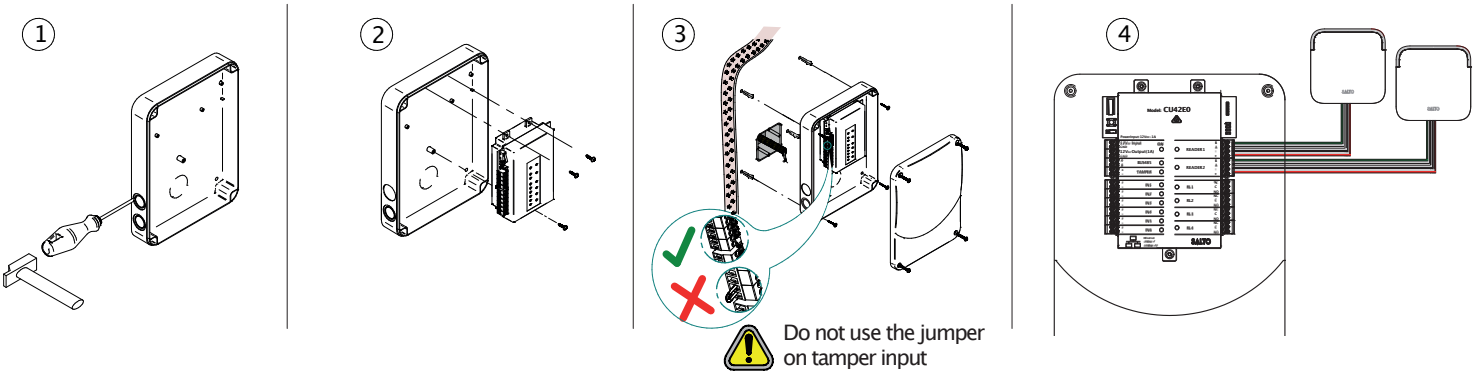

XS4 2.0 CONTROLLER – AUXILIAR OR OFFLINE DOOR CONTROLLER SETUP

OFFLINE AUXILIAR CONTROLLER (CU4200):

- No online connection.
- Do not requires IP address.
- Initializationvia PPD connection with the 3 pin cables directely to the controller or via PPD contactless through the wall reader.
- Set up throughSALTO ProAccess SPACE software.
- Set up: as one door (reader in & reader out).
- Access plan update via SALTO Virtual Network capabilities.
  user access plan and blacklist (list of users card cancelled) is transmited via the Data–on–card technology.

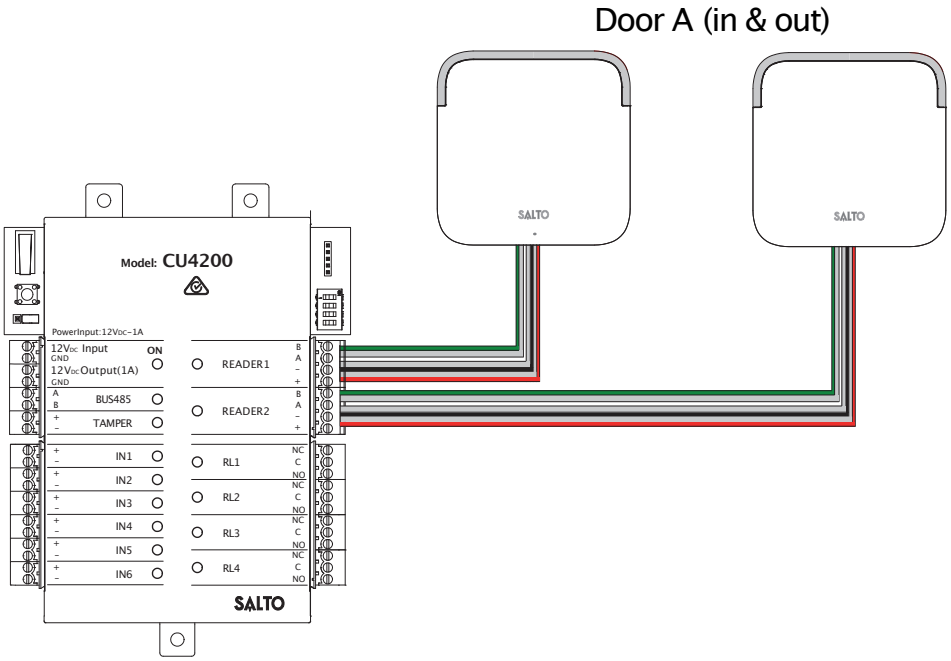

ACCESS CONTROL FEATURES

	R&W SVN
Maximum number of users per door	4,000,000
Maximum number of doors per system	64,000
Maximum events on controller audit	5,000
Time zones	256
Automatic changes tables in system	1,024
Calendars in system	256
Access levels in system	unlimited
Zones in system	1,024
Management software	ProAccess SPACE

SALTO VIRTUAL NETWORK CAPABILITIES

- Add or delete access privileges at will to the ID carriers.
- The ability to validate the expiry date of key cards on any SVN Online wall reader.
- Add security through additional authenticated validation procedures including pin codes as well the ability to blacklist cards from the system.
- On card audit–trailing to track staff or visitor movement.
- Lock specific battery power data is registered on any card using the lock –staff or visitor –and transferred back to the PC control software via any update reader just by using the system.
- Expiracy date can be extended if network connection is lost.

AVAILABLE OPENING MODES:

- STANDARD: Locked at all times.
- AUTOMATIC CHANGES: Any opening mode can be performed through logical set up of the controller.

ONLINE FEATURES FOR ONLINE CONTROLLERS

REAL–TIME ACCESS CONTROL CHANGES:

- Live monitoring of user entry and exit through the door controller.
- Live audit trail build up on the software.
- Door monitoring status for forced door and door left open alarm.
- Remote door opening from software.
- Door lock out or lock open emergency setting from software.
- The IP door controller can be included in roll call set up used, for example for user location monitoring parking controls etc

- Works as Online hub up to Online Energy Saving Devices (pending).
- Conected to standard Ethernet network.
- Works off–line if the network connection is lost.
- Communications betwwen the SALTO Service /online controller and auxiliary controller is secured and encrypted by AES 128 encryption.
- Invalidates deleted cards.

ACCESSORIES:

Model SP224861
Connecting circuit RJ45 cable adaptor for CU42E0 or CU4200.

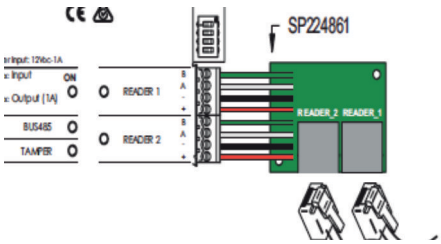

Model SP224895
Connecting circuit adaptor for RJ45 cable for WRDBxxx series.

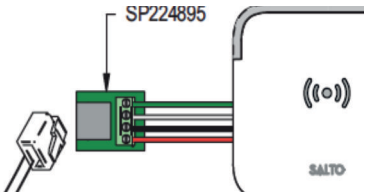

Datasheet-XS4CU42xx_ENG_09_15

LOCK-TEC (UK) Ltd
www.lock-tec.co.uk
4-6 Castle Street, Northwich,
Cheshire. CW8 1BA.
01606 331444
admin@lock-tec.co.uk

Systems reserves the right to modify technical specifications, designs and performance without notice. © SALTO SYSTEMS 2015

SALTO XS4 2.0
INPUT / OUTPUT EXPANSION UNIT

The new input / output expansion unit – CU4EB8 – is a device which, when connected to CU4200 door controllers, provides the option to manage multi relay switchable output systems such as elevator floor level access, multi shutter and barrier systems, machine switching and more.

When connected to an online device this expansion board permits to trigger alarms through the inputs and generate alarms or even logical actions through the SALTO ProAccess SPACE software.

CU4EB8

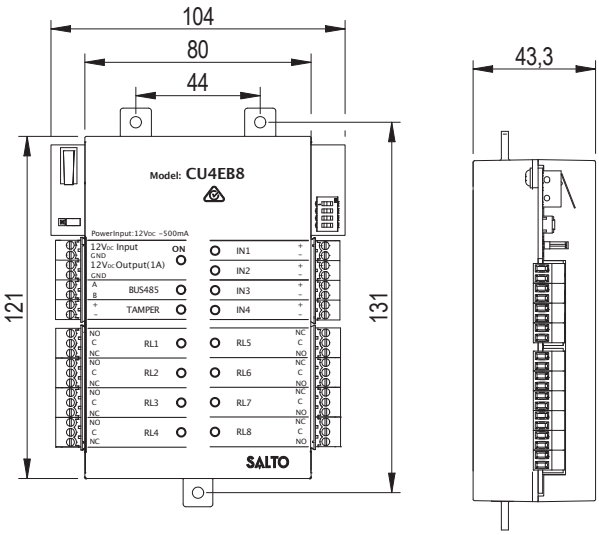

MAIN FEATURES

- Input and output board managed by the controller.
- Configurable by PPD.
- Upto 16 Expansion units can be connected to one controller
- To be used with XS4 2.0 Controller CU4200.
- 4 Automatic output.
- Fully integarted with the SALTO ProAccess Alarmas and communication module permiting to use the inputs to trigger any event.

MECHANICAL ASPECTS:
- Dimensions: 104mm x 131mm x 43,3mm (W x H x D).
- Weight: 0.5kg.

TECHNICAL CHARACTERISTICS:
- Connection to the controller through BUS485.
- 8 relay outputs.
- 4 inputs (not used in offline mode)
- 2 different tampers:
  - 1 tamper input
  - 1 tamper switch.
- The maximum cable length between the first and the last expansion unit on the RS485 BUS is 300 meters.
- Connection to the controller using 4 wire connection, twisted pair (AWG24).
- Power consumption: 12VDC 400mA, supplied by an adaptor.
- Maximum output relay load: 2A–30Vdc (resistive load)

CERTIFICATIONS:
- CE comform

INSTALLATION

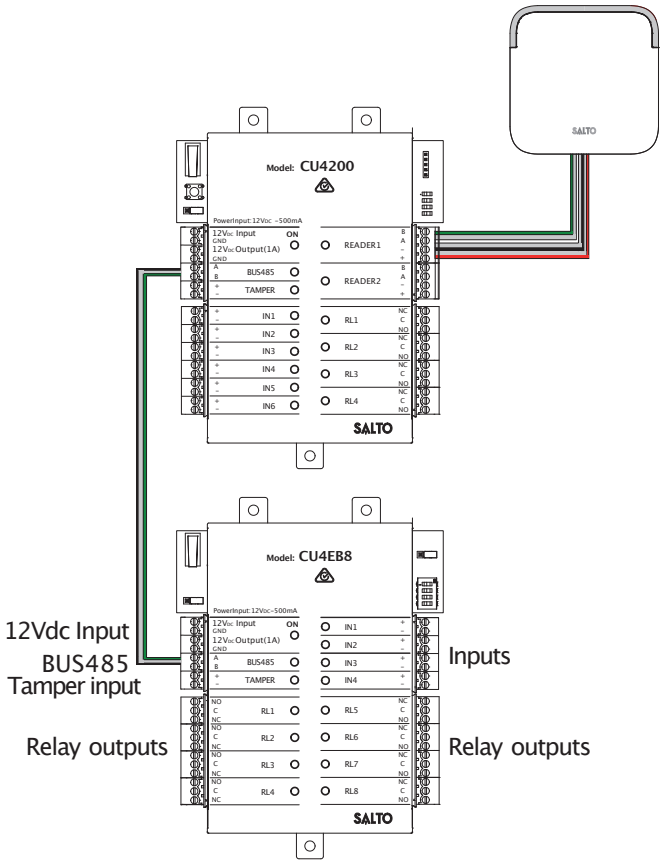

SALTO XS4 2.0
INPUT / OUTPUT EXPANSION UNIT WITH HOUSING

The new input / output expansion unit – CU4EB8 – is a device which, when connected to CU4200 door controllers, provides the option to manage multi relay switchable output systems such as elevator floor level access, multi shutter and barrier systems, machine switching and more.
When connected to an online device this expansion board permits to trigger alarms through the inputs and generate alarms or even logical actions through the SALTO ProAccess SPACE software.

With the new XS4 2.0 Input / output expansion unit with Housing it is easier to install and it enhanced the aesthetic and sturdiness.

CU4EB8x

CU4EB8T

CU4EB8G

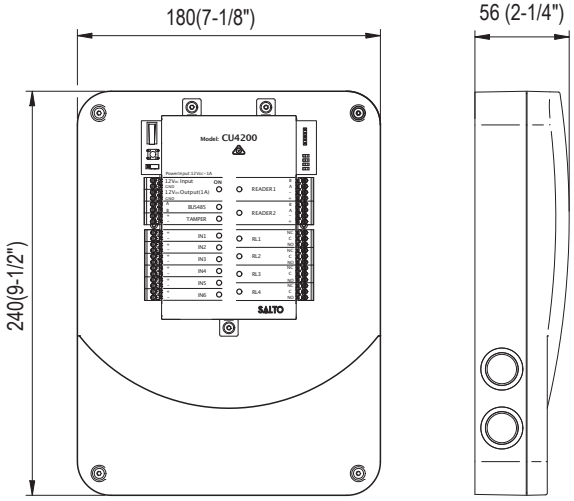

MAIN FEATURES

- Input and output board managed by the controller.
- Configurable by Software in online mode or by PPD in offline mode.
- Can be connected to 15 additional I/O Boards.
- To be used with XS4 2.0 Controller CU42E0 or CU4200.
- 4 Automatic output.
- 2 different Housing finishes translucent or grey opac.
- 8 pre-punched holes to fit the wiring.
- Screws and caps included.
- Fully integarted with the SALTO ProAccess Alarmas and communication module permiting to use the inputs to trigger any event.

MECHANICAL ASPECTS:
- Dimensions: 180mm x 240mm x 56mm (W x H x D).
- Weight: 0.7kg.

CERTIFICATIONS:
- CE comform

TECHNICAL CHARACTERISTICS:
- Connection to the controller through BUS485.
- 8 relay outputs.
- 4 inputs (not used in offline mode)
- 2 different tampers:
  - 1 tamper input
  - 1 tamper switch.
- The maximum cable length between the first and the last expansion unit on the RS485 BUS is 300 meters.
- Connection to the controller using 4 wire connection, twisted pair (AWG24).
- Power consumption: 12VDC 400mA, supplied by an adaptor.
- Maximum output relay load: 2A–30Vdc (resistive load)

INSTALLATION

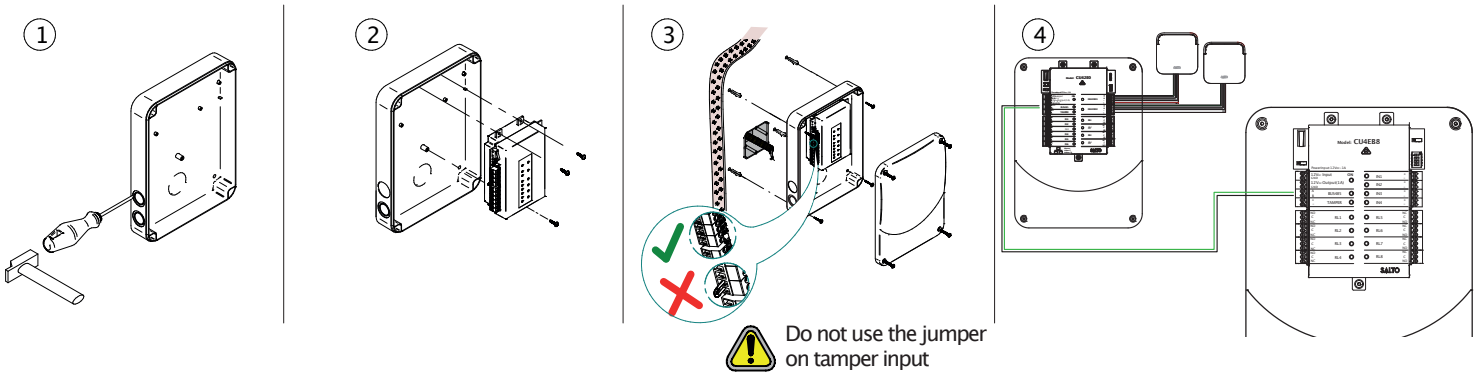

LOCK-TEC (UK) Ltd
www.lock-tec.co.uk
4-6 Castle Street, Northwich,
Cheshire. CW8 1BA.
01606 331444
admin@lock-tec.co.uk